Jacobs Vehicle Systems®

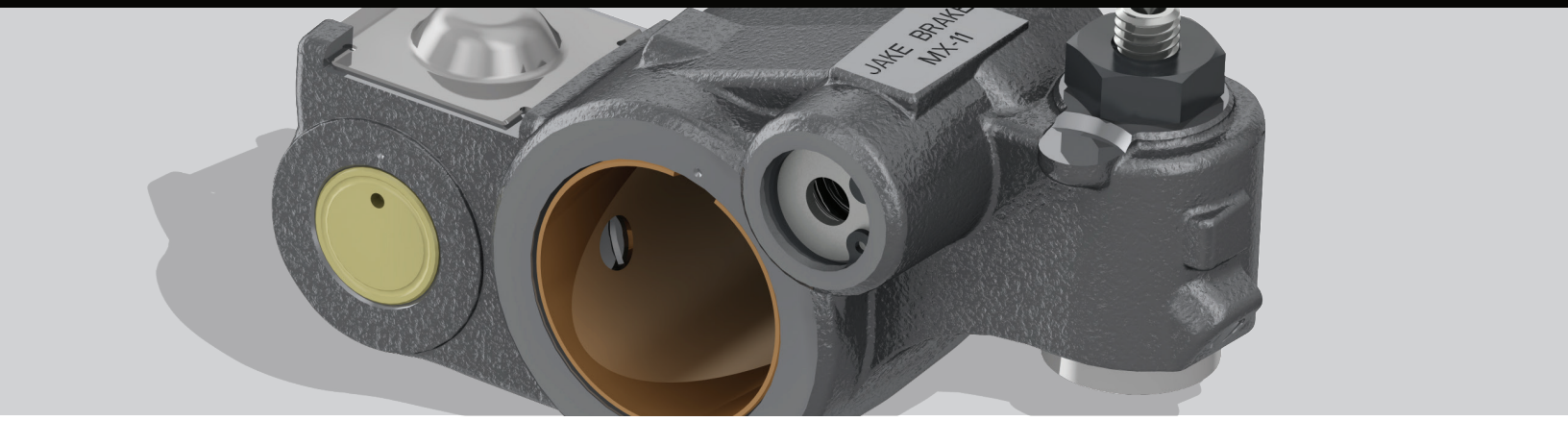

Engine Brake For **PACCAR MX-11 Engine**

The PACCAR MX-11 Engine Brake by Jacobs® was the result of more than three years of collaboration between Jacobs and DAF engineers to provide an integrated Engine Brake solution which minimizes weight and space while providing market leading braking power. The Jacobs Engine Brake® delivers as much as 319 kW (427 hp) of braking power at 2100 rpm and 208 kW (278 hp) at 1500 rpm, which is the most fuel efficient engine speed for maximum performance of the vehicle.

FEATURES

- Three stage engine brake operation, low/med/high
- Warranty administered directly by PACCAR – 3 years unlimited miles
- Quiet performing brake
- Integrated with engine electronic controls and ABS for greater driver control
- Consolidated design for ease in maintenance, lower weight and higher retarding power

MX-11 ENGINE BRAKE WARRANTY

- Will match the basic warranty mutually agreed by Jacobs and the engine manufacturer; 3 years unlimited.
- Replacement part warranty is 12 months unlimited miles.
- All claims for warranty are submitted through PACCAR and will be subject to the limitations of the agreement.

*Nothing in this document should be construed as an affiliation, endorsement, or sponsorship by PACCAR.

Technical Specifications

Kit added weight	7.2 kg / 15.8 lb.
Rocker units per engine	6
Lash Setting	4.15 mm ± 0.13 mm / 0.163 in

Retarding HP

RPM	KW	HP
1100	90	120
1300	151	202
1500	208	278
1700	254	340
1900	300	402
2100	319	427

Serviceable Part Numbers

DESCRIPTION	PART #
Rocker	1899996PE
Solenoid 24 vdc	1889795PE
Solenoid 12 vdc	1889796PE
Solenoid Type II Cover	1973584PE
MX-11 Springbar	1931960PE
MX-11 Nut	1973585PE

Jacobs Vehicle Systems®

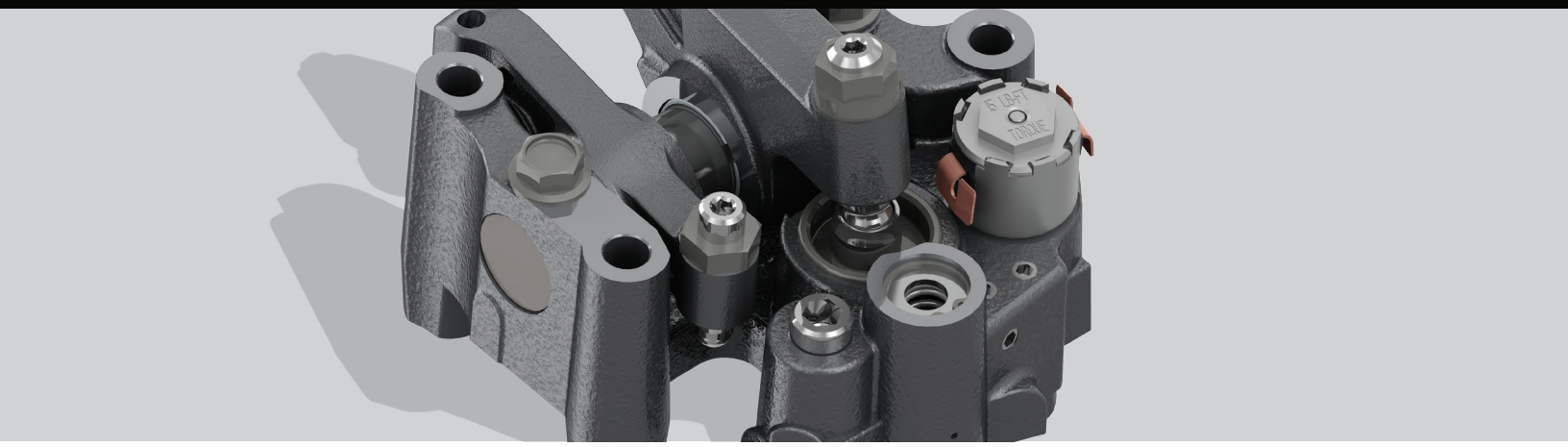

Engine Brake For **PACCAR MX-13 Engine**

In response to the global engine supplier's drive to provide lighter weight and compact designs, Jacobs' engineers developed the MX-13 engine brake for the PACCAR MX-13 Engine. This new technology provides excellent engine retarding performance in a fully integrated design.

FEATURES

- Three stage engine brake operation, low/med/high
- Warranty administered directly by PACCAR – 3 years unlimited miles
- Quiet performing brake
- Integrated with engine electronic controls and ABS for greater driver control
- Consolidated design for ease in maintenance, lower weight and higher retarding power

MX-13 ENGINE BRAKE WARRANTY

- Will match the basic warranty mutually agreed by Jacobs and the engine manufacturer; 3 years unlimited.
- Replacement part warranty is 12 months unlimited miles.
- All claims for warranty are submitted through PACCAR and will be subject to the limitations of the agreement.

*Nothing in this document should be construed as an affiliation, endorsement, or sponsorship by PACCAR.

Technical Specifications

Kit added weight	25 kg / 54 lb.
Rocker units per engine	6
Lash Setting	0.7 mm / .0275 in

Retarding HP

RPM	KW	HP
1100	104	140
1300	173	231
1500	272	365
1700	318	426
1900	357	479
2100	383	514

Serviceable Part Numbers

DESCRIPTION	PART #
Engine Brake Assembly 24 vdc	1875605PE
Engine Brake Assembly 12 vdc	1875607PE
Solenoid 24 vdc	1673521PE
Solenoid 12 vdc	1739797PE
Exhaust Rocker Arm	1737331PE
Intake Rocker Arm	1914463PE
Rocker Shaft	1734420PE
Rocker Arm Spacer	1673528PE

 ©2017 JACOBS VEHICLE SYSTEMS