Jacobs Vehicle Systems®

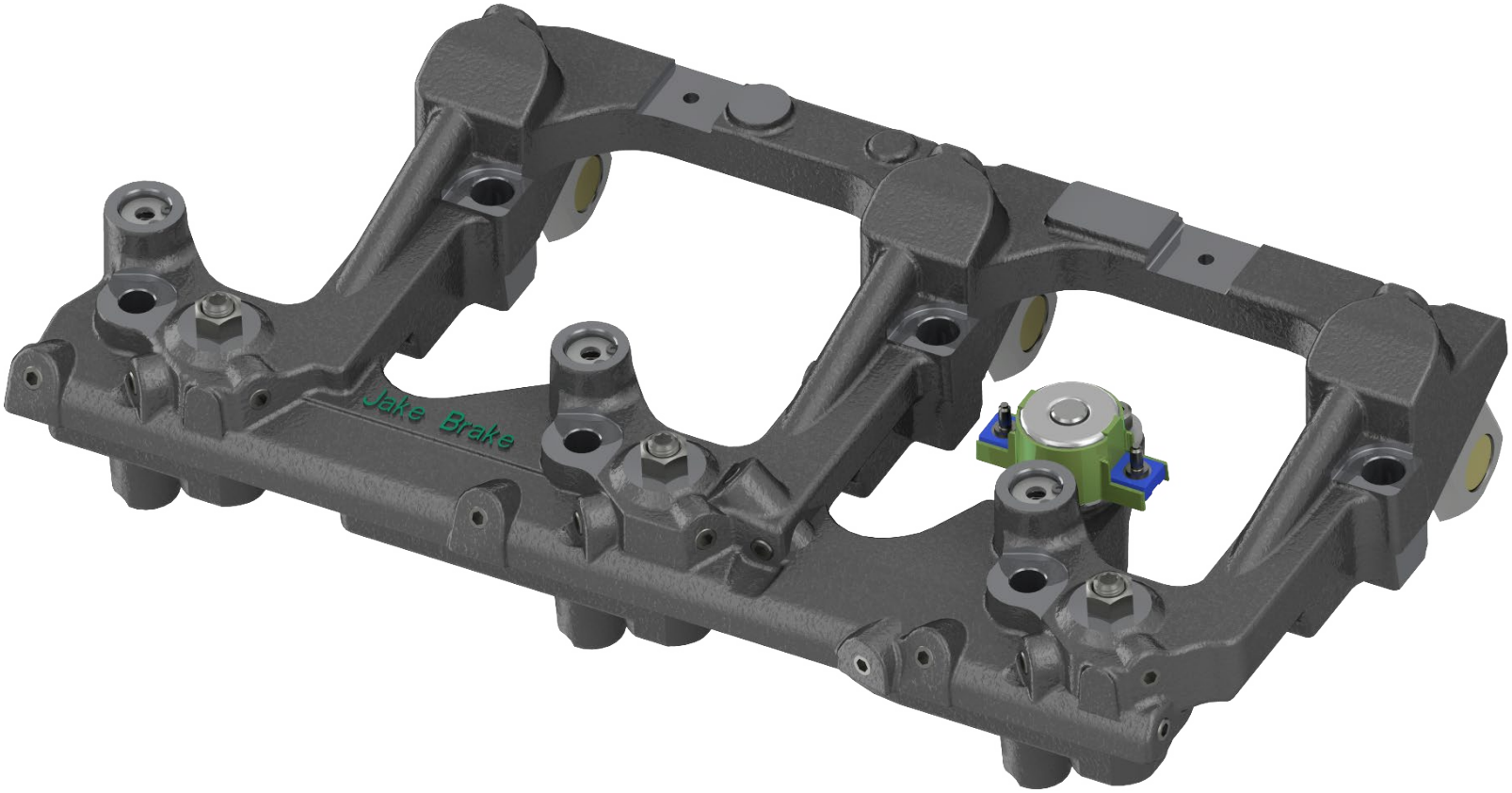

Jacobs Engine Brake Model 5783A

For INTERNATIONAL A26 Engine Applications

Jacobs and International collaborated to increase engine braking performance by up to 67% at lower engine speeds utilizing the new Variable Geometry Turbo. This engine update improves driveability, increases foundation brake life, and lowers total cost of ownership in trucks equipped with the A26 engine.

Available on all International® LT and RH vehicles, the Jacobs Engine Brake® comes factory installed when you order your vehicle or is available as a retrofit option. Contact your local International dealer for more information.

FEATURES

- Jacobs trademarked Jake Brake®
- Certified and approved by International
- Matches standard A26 base warranty
- Three stage engine brake operation, low/med/high
- Fully integrated with engine electronic controls
- Integrated with vehicle ABS for greater driver control
- Factory installed or dealer retrofit
- Compression release engine-mounted brake
- Quieter performing brake
- Two engine brake housing configuration for easy maintenance
- Product support through your local International® dealer

Jacobs Vehicle Systems®

Jacobs Engine Brake Model 5783A for the INTERNATIONAL A26 Engine Applications

Performance Information

RPM	HP	Torque (ft-lbs)
1100	188	899
1300	259	1046
1500	287	1005
1700	324	998
1900	361	996
2100	396	988
2300	456	1039

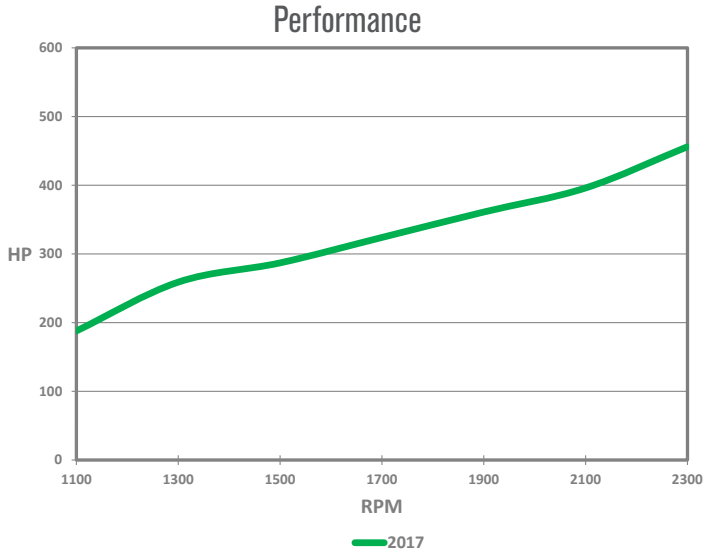

- Extra slowing power can reduce overheating and fading of service brakes.
- Increases service brake life up to three (3) times.
- Lowers maintenance costs and vehicle maintenance time.
- Additional downhill control of vehicle.
- Proven technology, durable and reliable operation.
- Improved brake performance at lower engine rpm.

Technical Specifications

Height	4”	106 mm
Length	17”	424 mm
Width	8”	200 mm

Kit Added Weight	48 lbs	22 kg
Housings Per Engine	2	
Lash Setting	0.0314”	0.8 mm

Serviceable Parts	Part Number
Type II Solenoid Kit	3008453C1
Brake Housing Assembly	3007628C93
Exhaust Bridge	3007627C1
Feeler Gage	01-040044
Control Valve Kit	3008454C2
Slave Piston Kit	3008452C1

Engine Brake Warranty

The Jacobs Engine Brake for the A26 engine is fully covered under the two year, unlimited mile engine warranty.

All claims for warranty are submitted through International and will be subject to the limitations of the agreement.